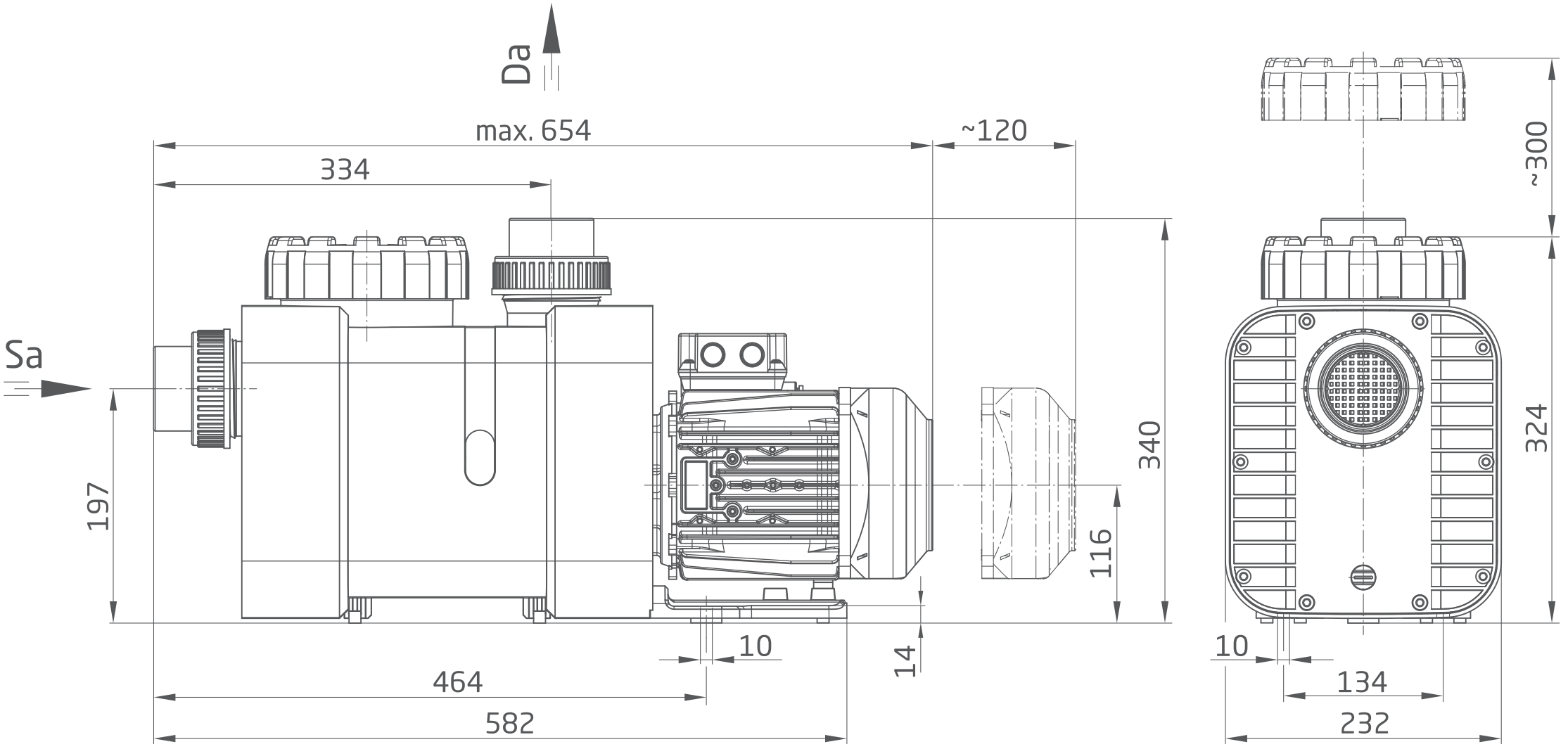BADU Delta
D90.13.400